RsPi-L293D-3-v2.0 6 Motor Board User Manual

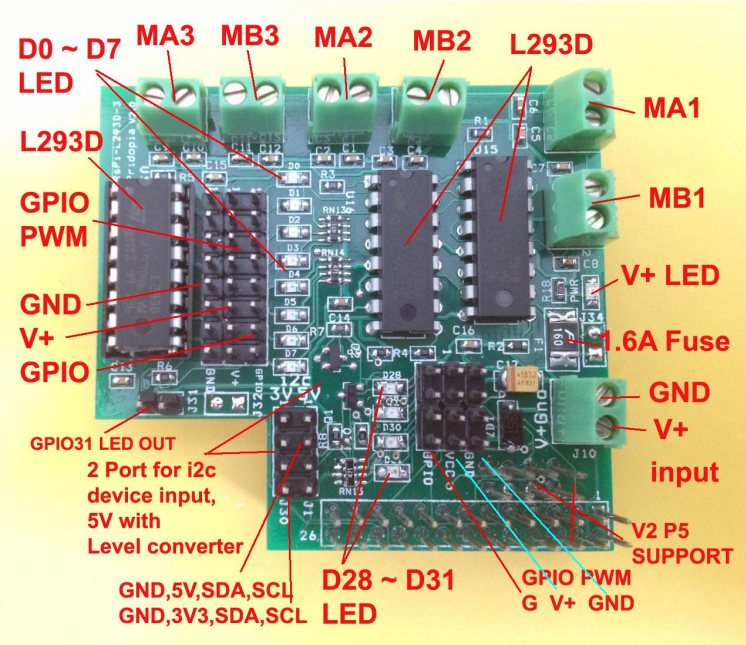

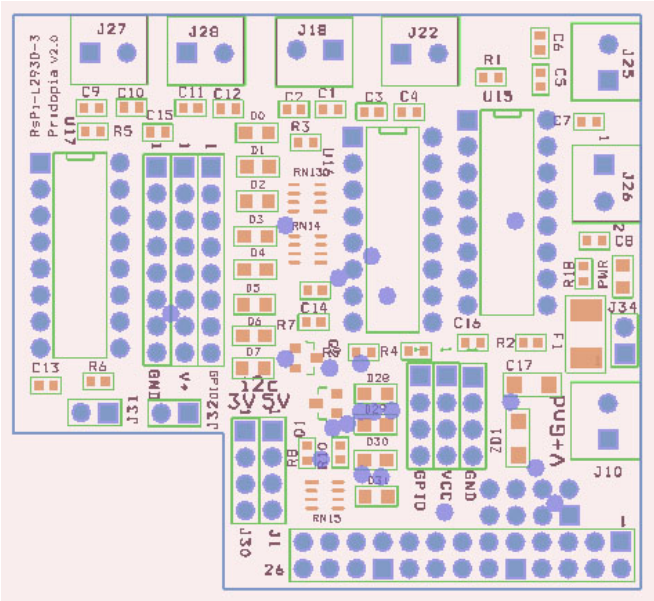

Rs-Pi P1Connector

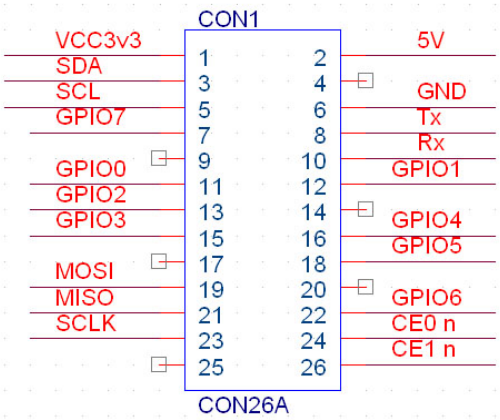

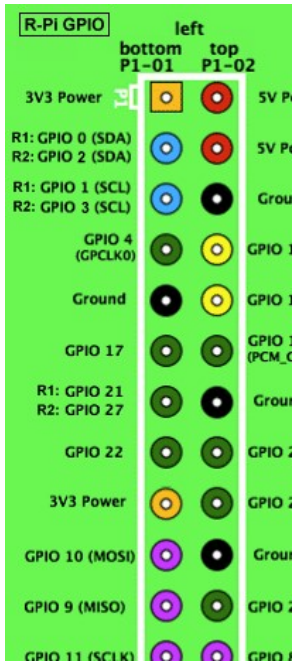

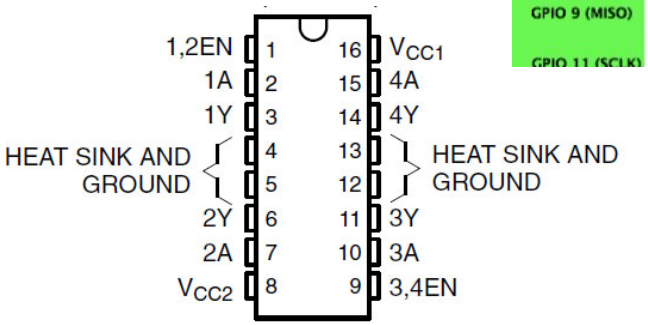

Pin 1	Pin 2	Pin 7	Function
High	Low	High	Turn clockwise
High	High	Low	Turn anti-clockwise
High	Low	Low	Stop
High	High	High	Stop
Low	Not applicable	Not applicable	Stop

Pin 11(GPIO 17) , Pin12 (GPIO 18) , Pin13 (GPIO 27) , Pin15 (GPIO 22)
Pin 16(GPIO 23) , Pin18 (GPIO 24) , Pin22 (GPIO 25) , Pin7 (GPIO 4)

L293D use RS-Pi pin 11,12,13,15,16,18,22,7 as
GPIO 0 to GPIO 7 input
GPIO 0 ~ 3 for MA1, MB1
GPIO 4 ~ 7 for MA2, MB2

GPIO 28 ~31 for MA3,MB3 (need V2 - P5 connector) or use for ultrasonic sensor connector (2GPIO , one for Trig, one for Echo)
2 extra 12c input for sensors (5V or 3v3) (5V port with Level converter)

1. J29 pin1 – pin5 GPIO28,GPIO29,GPIO30,GPIO31,GND
   J30 pin1 – pin4 GND,3V3,SDA,SCL
   J1 pin1 – pin4 GND,5V,SDA,SCL
2. U15,U16, U17 L293D
3. J17 RS-Pi-V2 GPIO28,GPIO29,GPIO30,GPIO31 from V2 GPIO
4. 5 . J24 Mini USB 5V input

* Motor use 5V DC Motor

L293D use RS-Pi pin 11,12,13,15,16,18,22,7 as
GPIO 0 to GPIO 7 input

I f you want use GPIO 28,29,30,31 for other function not for motor control, remove U17 L293D from socket

Download GPIO library

https://pypi.python.org/pypi/RPi.GPIO GPIO library

GPIO library - RPi.GPIO-0.5.4.tar.gz

Install python , library and run the test program

```
# sudo apt-get install python-dev
# wget http://www.pridopia.co.uk/pi-pgm/RPi.GPIO-0.5.4.tar.gz
# gunzip RPi.GPIO-0.5.4.tar.gz
# tar –xvf RPi.GPIO-0.5.4.tar
# cd RPi.GPIO-0.5.4
# sudo python setup.py install
# sudo python 6motor.py
```

Test Program

Download test program on our web site

http://www.pridopia.co.uk/pi-L293d-3.html

2motor.py 4motor.py 6motor.py Maplin-Arm.py

New Pridopia scratch interface software you can download from our web site
http://www.pridopia.co.uk/rs-pi-set-scratch.html

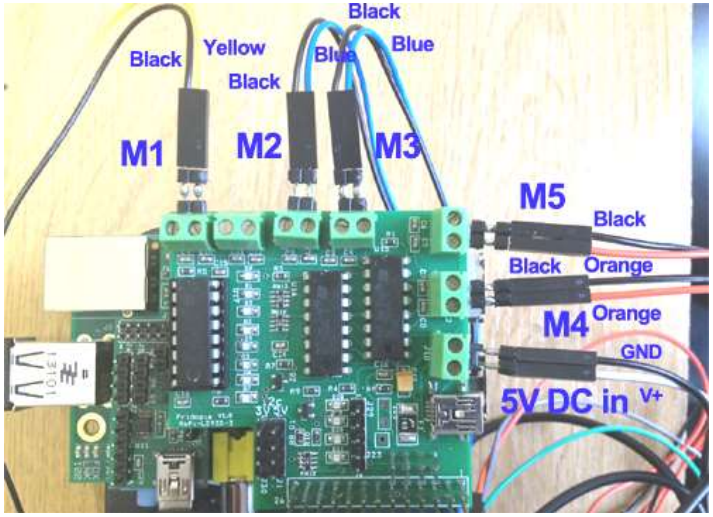

Package Content

1x Rs-Pi L293D-3-v2 6 Motor board
1x Manual

(1) xWindows control mode

Maplin-Arm.py demo

Use mouse & keyboard control in xWindows
control 5 Motor (M1, M2, M3, M4, M5) and LED ON/OFF

(2) Scratch GPIO control mode

1. setting GPIO 17,18,27,22,23,24,25,4 as output
2. setting GPIO 28,29,31 as output

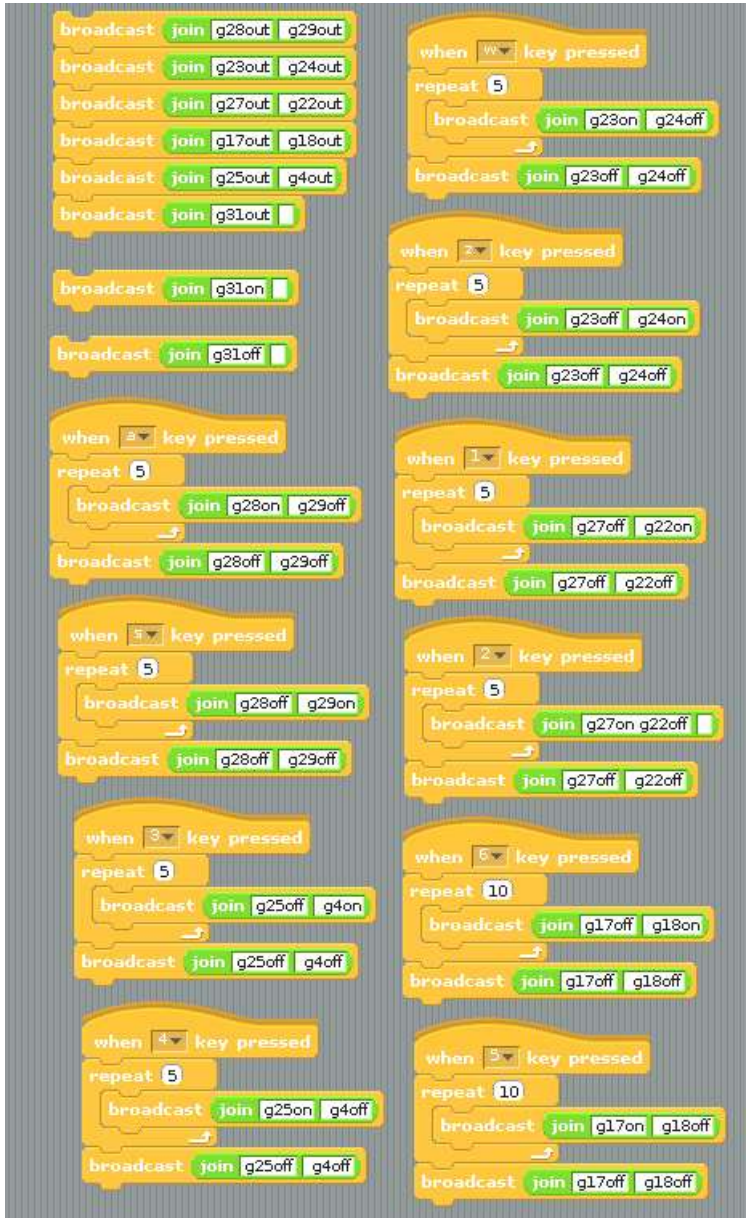

(3) Scratch PWM command mode

Include i2c 20x4 LCD Screen & i2c 24x16 LED Matrix

A - GPIO 17,18 Motor A B - GPIO 27,22 Motor B

C - GPIO 23,24 Motor C D - GPIO 25,4 Motor D

E - GPIO 28,29 Motor E

command "Motor Name"+ "DM"+"speed"

speed (10 ~100) clockwise

speed (-10 ~ -100) anticlockwise