IR PIR Motion Sensor Module

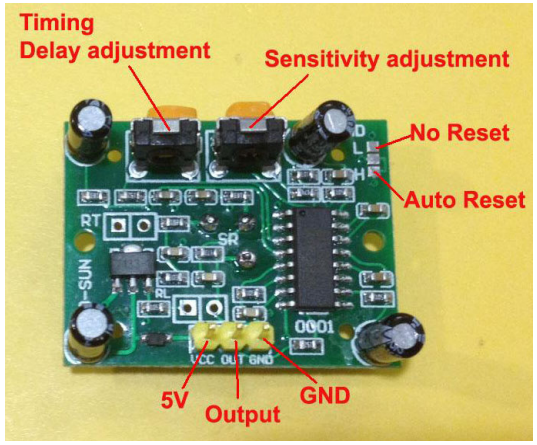

Pyroelectric PIR sensor, Fresnel
Low-power, static power 65uA, Wide voltage range, DC 5V-20V
Board small size 38 * 28mm (32 * 24 * mm)
Repeatable / not repeatable trigger mode selection
Easy to use, power + - signal output
7 m sensing range , 110 degree angle sensor
Electrical Parameters:
Operating voltage range of 5-20V DC voltage
65uA quiescent current, High output level 3.3 V / Low 0V
Non-repeatable trigger L trigger / H Repeat Trigger
PCB dimensions 38 * 28mm (32 * 24 * mm)

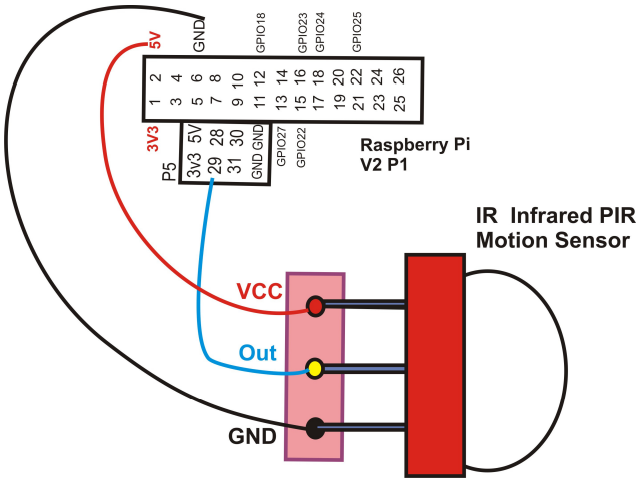

The solder pads allow you to choose if the output should automatically reset itself after it is triggered. If set to **Auto-reset** the sensor will stay high until the motion stops. After motion is no longer detected the output will go low. If set to**No reset** the sensor will stop sensing once it has triggered, and stays high for the preset time period. To choose one of these settings, simply create a solder-bridge between the labelled pad and the pad in the middle. The potentiometer labelled **Sensitivity** allows you to select the distance that the sensor will work over. It can be varied from approximately 3m to 7m. The potentiometer labelled **Output timing** adjusts how long the output is held high after the sensor is triggered. This can be varied from approximately 5 seconds to 300 seconds.

(2) i2c 23008 & 23017 GPIO pin for input

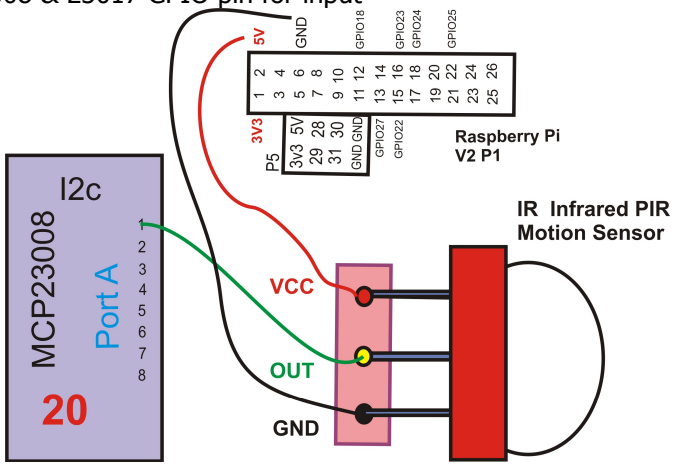

(1)Raspberry Pi GPIO pin for input

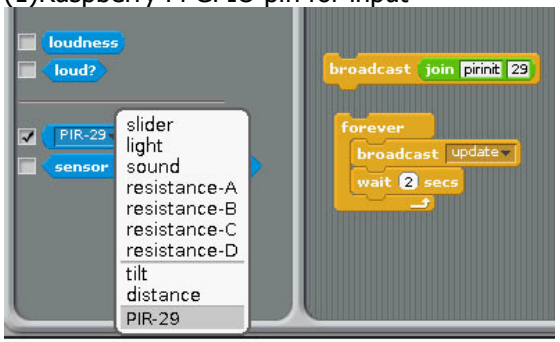

(1) broadcast "pir" + "init" + "29" GPIO 29 as input

(2) in Sensing --> Slider , you will see the "PIR-29" in the list

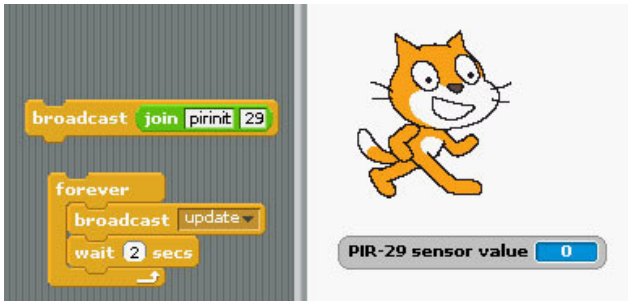

The PIR -29 value change between "0" & "1"

(2) i2c 23008 GPIO input

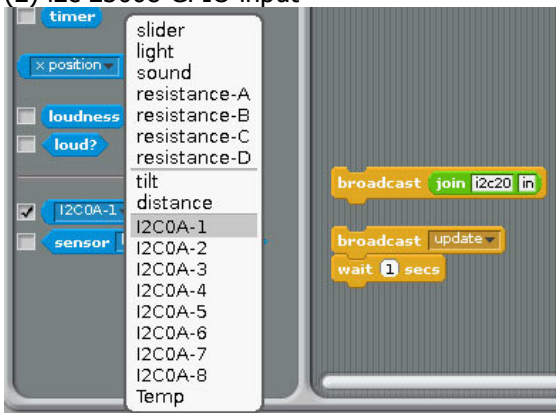

(1)"i2c20in" initial address 20, Port A as input

(2) broadcast "Update" (3) in Sensing --> Slider , you will see the " I2C0A-1 ~ I2C0A-8" in the list

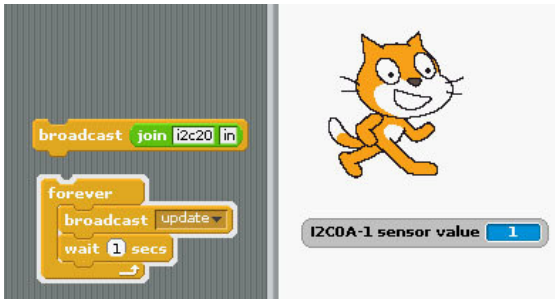

The I2C0A-1 value change between "0" & "1"

(3) i2c 23017 GPIO pin for input

Command "i2"+ "address(1-8)" + "a" +"in" for Port A
Command "i2"+ "address(1-8)" + "b" +"in" for Port B
Address 20 --> 1 21 --> 2 22-->3 23 -->4
Address 24 --> 5 25 --> 6 26-->7 27 -->8

command "i22bin" initial address 21, Port B as input

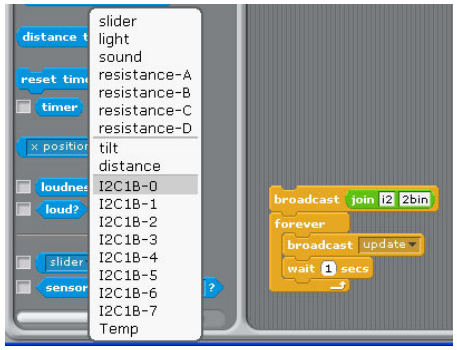

(1)"i22bin" initial address 21, Port B as input

(2) broadcast "Update"

(3) in Sensing --> Slider , you will see the " I2C1B-0 ~ I2C1B-7" in the list

Pi_Scratch interface software download from our web site
http://www.pridopia.co.uk/rs-pi-set-scratch.html

Download GPIO library

https://pypi.python.org/pypi/RPi.GPIO GPIO library

GPIO library - RPi.GPIO-0.5.3a.tar.gz

Install python , library and run the test program

sudo apt-get install python-dev

wget http://www.pridopia.co.uk/pi-pgm/RPi.GPIO-0.5.3a.tar.gz
gunzip RPi.GPIO-0.5.3a.tar.gz
tar –xvf RPi.GPIO-0.5.3a.tar
cd RPi.GPIO-0.5.3a
sudo python setup.py install

Demo program download from our web site
http://www.pridopia.co.uk/pi-ir-motion.html

Package Content

1x Rs-Pi IR PIR Motion Sensor module

3x 20cm male to male cable

1x Manual